DH-HAC-HDBW2220R-Z

2.4Megapixel 1080P Vandal-proof IR HDCVI Dome Camera

Features

- 1/2.8" 2.4Megapixel CMOS
- 25/30fps@1080P, 25/30/50/60fps@720P
- High speed, long distance real-time transmission
- HD and SD switchable
- OSD Menu, control over coaxial cable
- DWDR, Day/Night(ICR), AWB, AGC, BLC, 3DNR
- 2.7~12mm motorized lens
- Max. IR LEDs length 30m, Smart IR
- IP67, IK10, DC12V

DH-HAC-HDBW2220R-Z

Technical Specifications

Model	DH-HAC-HDBW2220RP-Z	DH-HAC-HDBW2220RN-Z
Camera		
Image Sensor	1/2.8" 2.4Megapixel CMOS	
Effective Pixels	1984(H)×1225(V)	
Electronic Shutter	1/3s~1/100,000s	
Video Frame Rate	25/30/50/60fps@720P; 25/30fps@1080P	
Synchronization	Internal	
Min. Illumination	0.05Lux/F1.4, 0Lux IR on	
Video Output	1-channel BNC HDCVI high definition video output/ CVBS standard definition video output (Can switch)	
Camera Features		
Max. IR LEDs Length	30m, Smart IR	
Day/Night	Auto(ICR) / Color / B/W	
Noise Reduction	2D/3D	
OSD Menu	Support	
Lens		
Focal Length	2.7~12mm	
Angle of View	H: 99° ~34°	
Lens Type	Motorized / Fixed Iris	
Mount Type	Φ14	
General		
Power Supply	DC12V±20%	
Power Consumption	Max 8.6W	
Working Environment	-30°C~+60°C / Less than 95%RH (no condensation)	
Transmission Distance	Over 500m via 75-3 coaxial cable	
Ingress Protection	IP67 & IK10	
Dimensions	Φ122mm×89mm	
Weight	0.45kg	
Material	Metal	

DH-HAC-HDBW2220R-Z

Dimensions (mm)

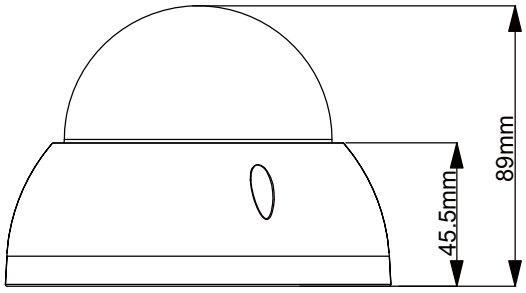

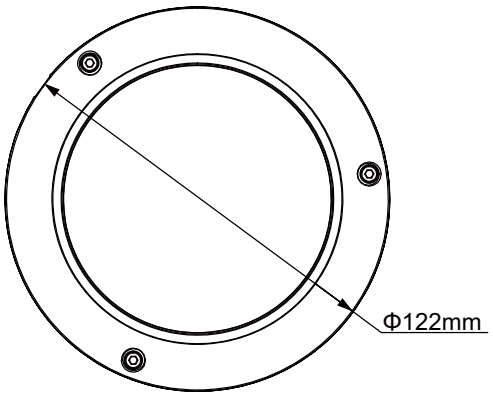

Accessories (optional)

PFB203W	PFA137	PFA152

*Design and specifications are subject to change without notice.

© 2014 Dahua Technology